FANCY

Feature & Specification

- Mounting: Surface type
- Material Optional: Mirror St/steel
  Hairline St/steel
- Optional Button:

<BAS101>

<MA1ZOO>

- Emergency Light: MA1C03
- Keyswitch: A4P72774
- Toggle Switch: Optional
- LED Colour: ■ ■ □

Display \ Type	Fancy Cop	Fancy Lop
Parallel	BVL131/BVD291	BVL121/BVD231
RS485 Monarch Protocol	R600 / R610 / R630	R60M / R61M / R63M
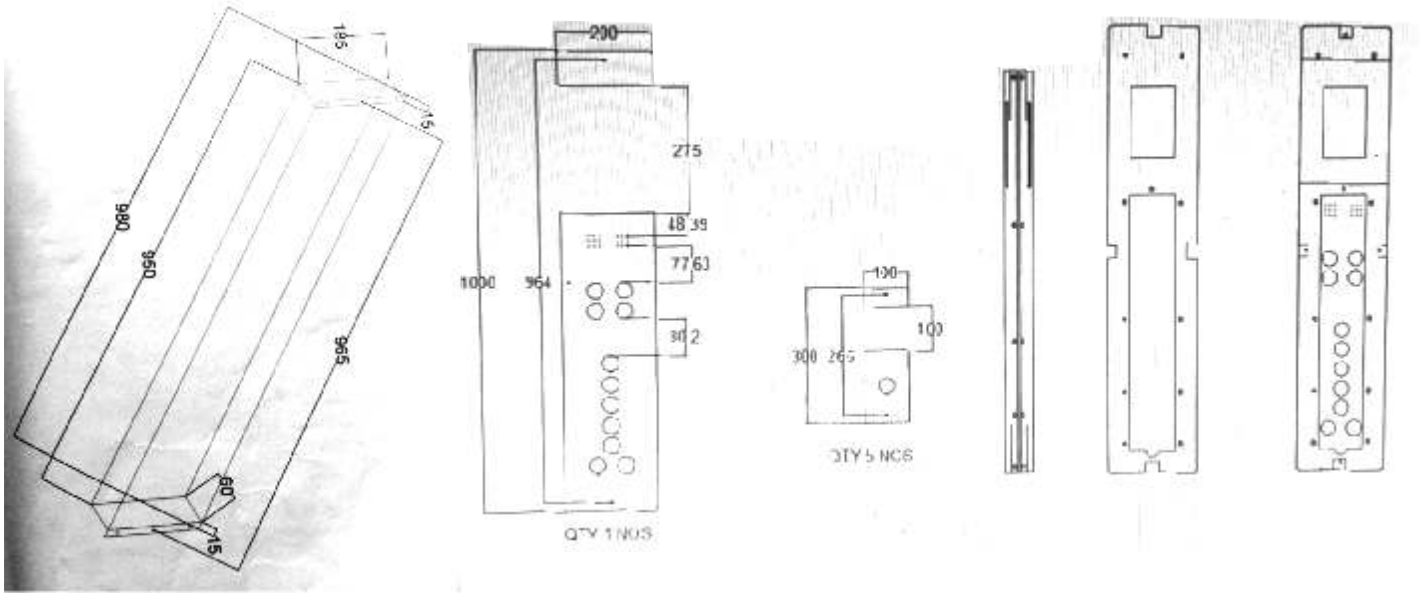
Figure & Installation Dimension(mm)